Bar Cocktail Round table Stretch Printed Table Cover 60cm(D) X 110cm(H)

Template:

Bar Round Table Stretch Table Cover

Product Code: DSA-TC17-BAR-CP-001

Specifications:

Artwork at 100% of print size

Table Size:
Diameter: 800mm
Height: 1100mm

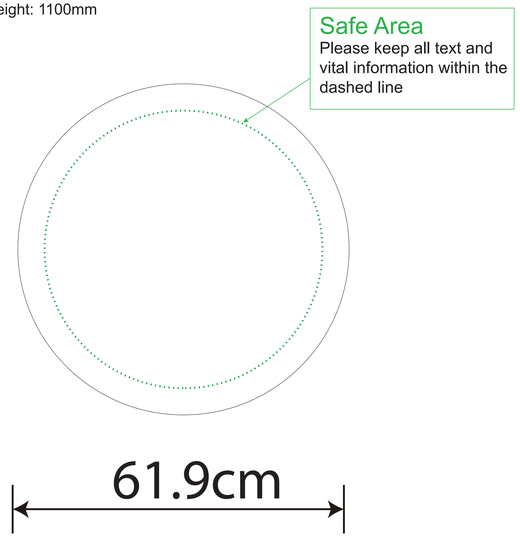

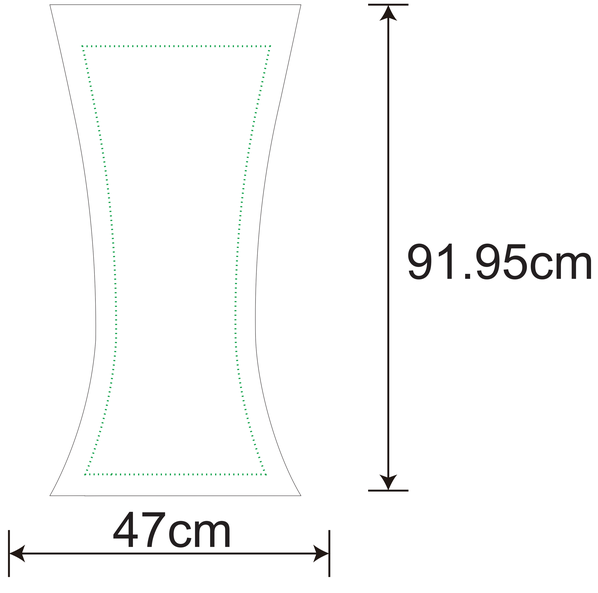

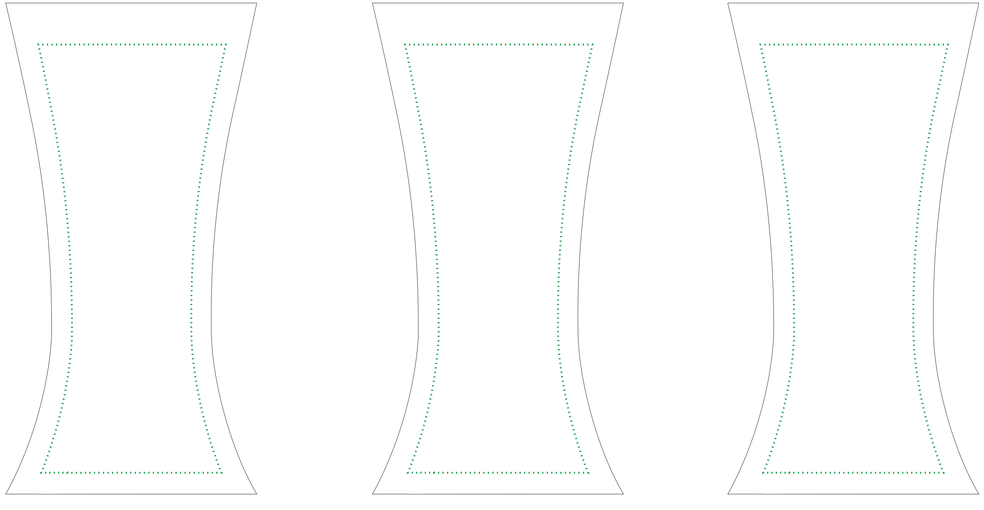

Please note:

1. Outline all fonts
2. Embed all Images
3. Colours printed with ink on different media look different to colours displayed on a computer screen. It is essential that the correct corporate colours be specified by the client before printing. Please provide pantone colours to ensure the colours are printed as close as possible to your corporate colours.